Diffusor 125, transparent

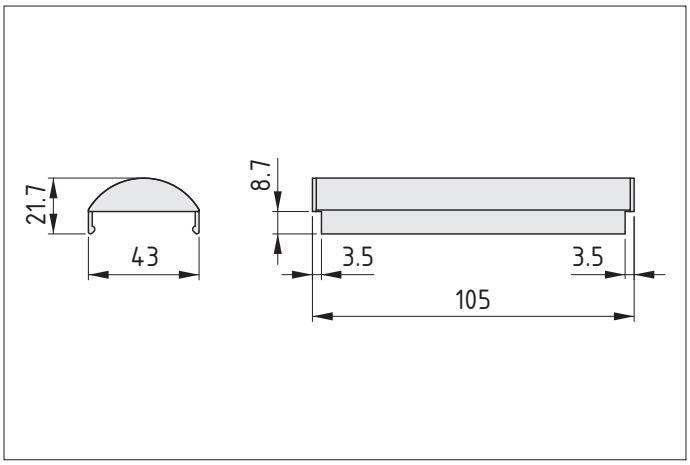

REACH RoHS

Diffusor 125 is a cover designed to scatter light and is intended for use with Multi-Segment RGB Light IO-Link 125 (0.0.721.00). It is simply fitted in place to generate an even lighting effect, whereby individual LEDs are no longer distinguishable.

Scope of Delivery

Technical note

0.0.720.76 Please click here for further information!

Properties

Article number	0.0.720.76
Colour	transparent
Delivery unit	1 pce.
Weight	15.0 g
Material	PC

Accessoires