Castor D100 swivel with double-brake, heavy-duty

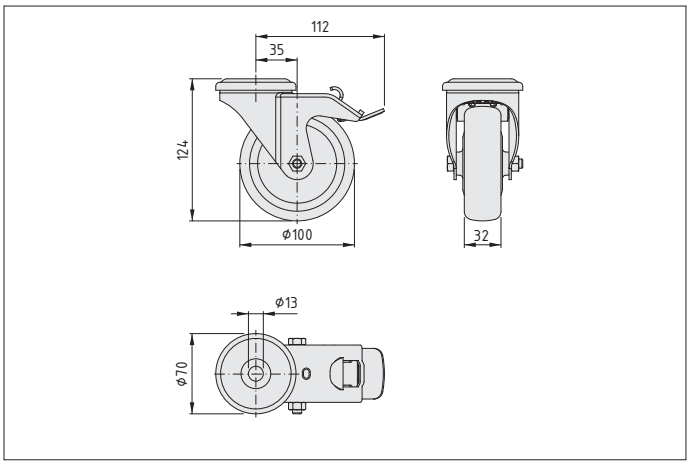

REACH RoHS

Castor D100 swivel with double-brake, heavy-duty features a castor with a particularly high load-carrying capacity and a robust metal housing. It is ideal for mobile applications that involve high loads, such as tugger trains and Base Carts for driverless transport systems. When the double-brake is actuated, both the wheel and the swivel mechanism are locked.
These castors are available as swivel castors and swivel castors with a double-brake.

Scope of Delivery

1 steel sheet casing, bright zinc-plated
1 swivelling axle with ball bearing
1 wheel axle with ball bearing
1 dust shield
Tyre PU, track-free, 94 Sh A, grey

Technical note

0.0.723.53 For more information, please click here!

Properties	
Article number	0.0.723.53
Delivery unit	1 pce.
Weight	738.5 g
Material	St
Load-carrying capacity	150 kg/Castor

Accessoires	
0.0.726.65	Base Cart MiR, Fastening Set for Castor D100 swivel, heavy-duty